© DEN HARTOG INDUSTRIES, INC.

Copyright. All information furnished within this document, electronic file or design correspondence is the property of Den Hartog industries, Inc. and shall not be used, disclosed to others or copied without the expressed written consent of Den Hartog Industries, Inc.

OP0055-2DC

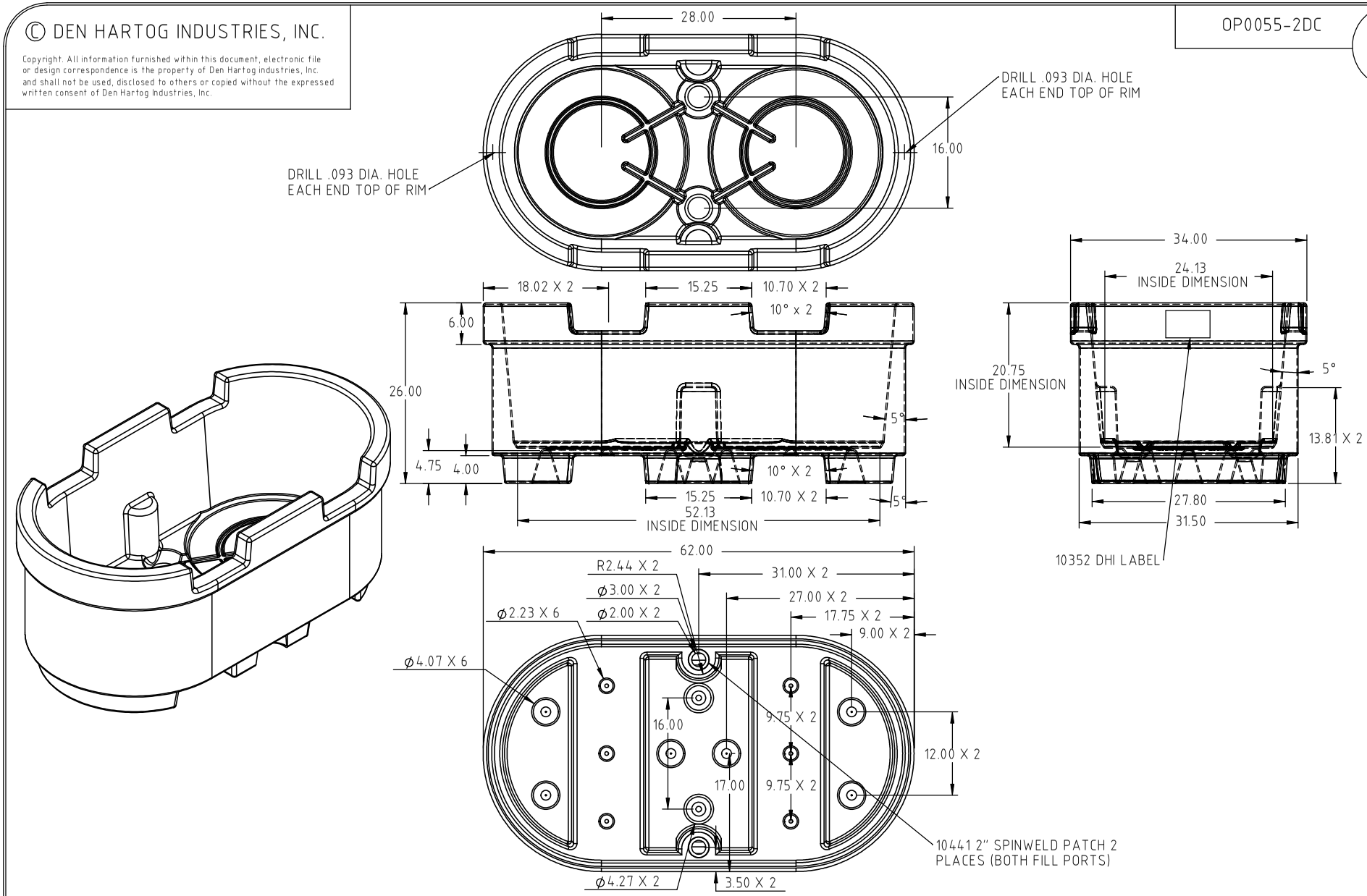

REV	DESCRIPTION	BY / DATE	CCN

DRAWN / DATE: ADH 12/1/09

APPRD. / DATE: REH 12/10/09

MATERIAL: 10546

ALL DIMENSIONS ARE IN DECIMAL INCHES
TOLERANCES UNLESS OTHERWISE SPECIFIED

POLYETHYLENE: ±1% @ 68° F

METAL: DECIMAL ± .125" FRACTION ± 1/4" ANGLE ± 1°

THIRD ANGLE PROJECTION ANSI 14.5M

SHOT WEIGHT: 70.00 LBS

SHIPPING WEIGHT: 70.00 LBS

FINISH:

NOTES:
1.) 0.190 WALL
2.) BLACK COLOR

Den Hartog INDUSTRIES, INC.

Ace Roto-Mold Injection Molding Blow Molding Sowjoy

4010 HOSPERS DRIVE S. BOX 425, HOSPERS, IOWA 51238-0425

DESCRIPTION: 2 DRUM CONTAINMENT TANK

SCALE: N.S.

PART NO.: OP0055-2DC