REVISIONS				
ZONE	REV	DESCRIPTION	DATE	APPROVED

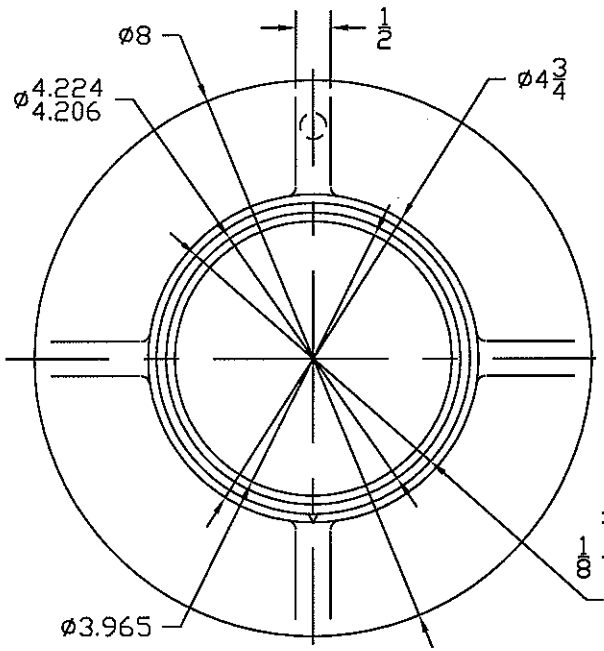

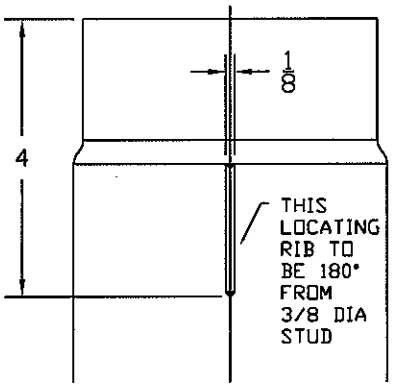

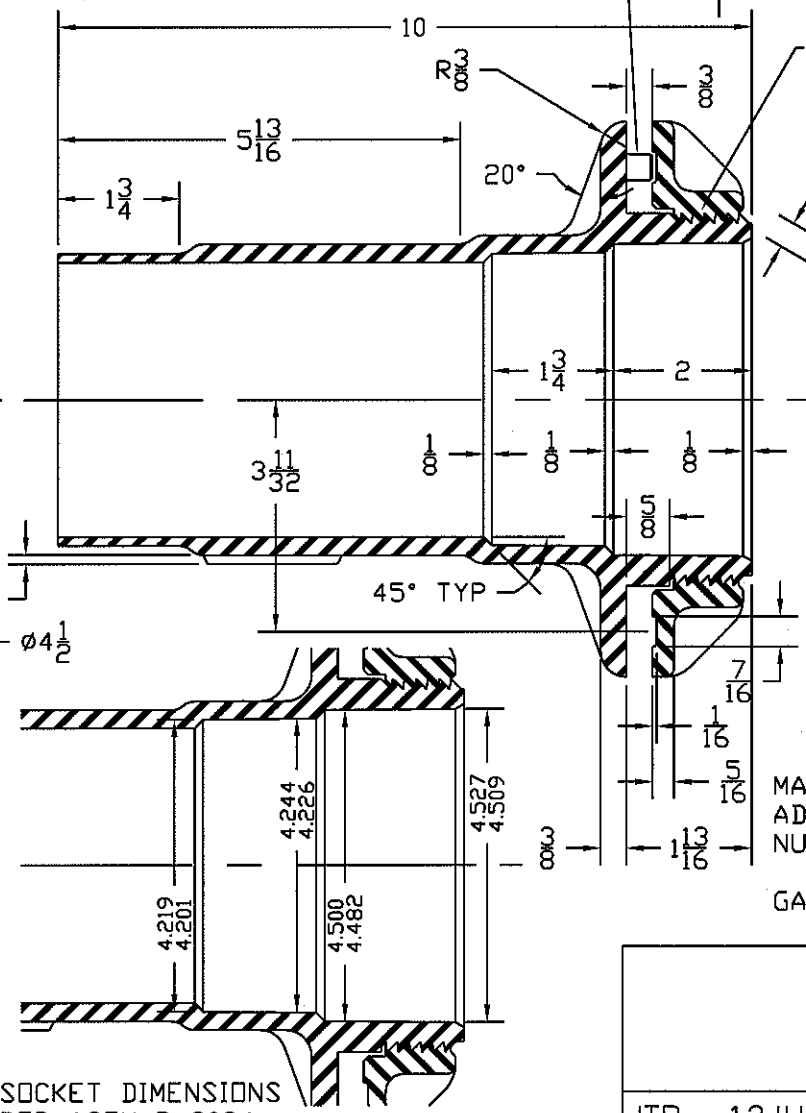

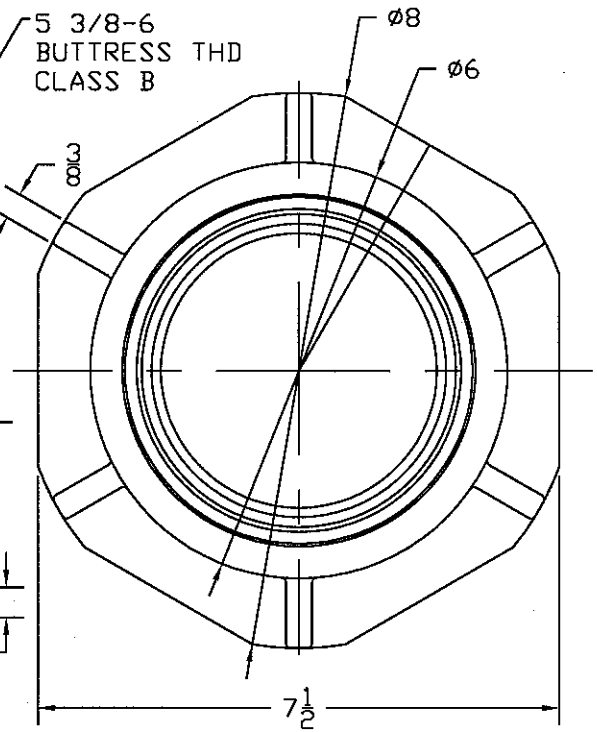

MAT'L:
ADAPTER: WHITE TYPE 1, GRADE 1 PVC
NUT: WHITE TALC-FILLED POLYPROPYLENE
GASKET: EPDM (SEE DWG NO 63153)

NORWESCO
ST. BONIFACIUS, MN

SEPTIC ADAPTER, SDR 35
W/ NUT & GASKET

JTP 12JUL02	SIZE B	FSCM NO.	DWG NO. 63151	REV
	SCALE 1/2		SHEET	