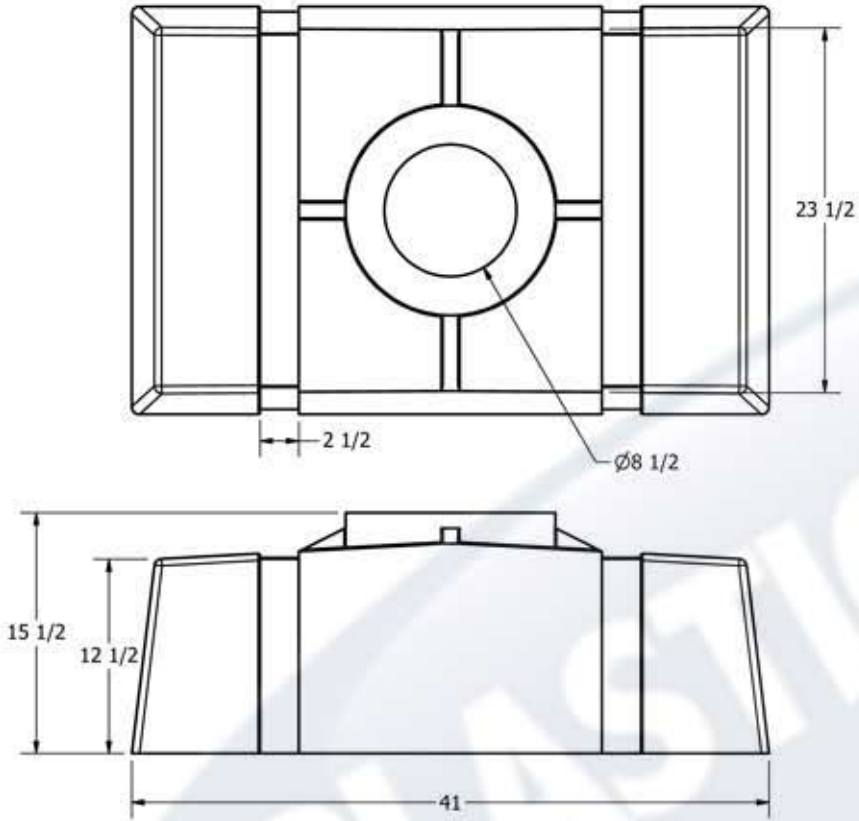

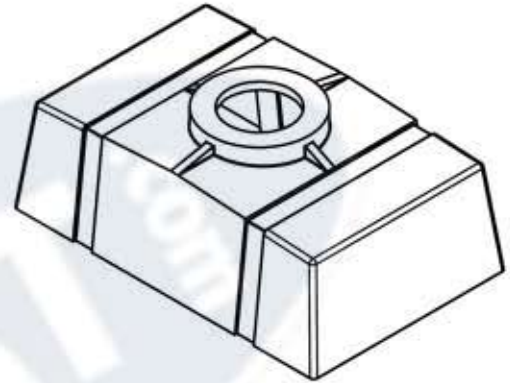

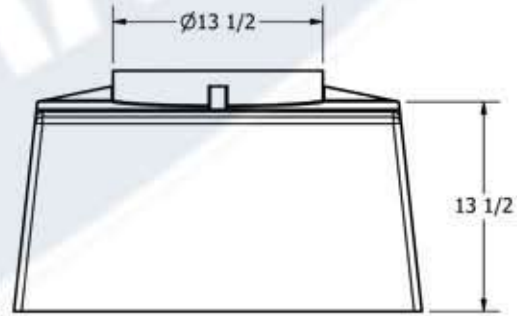

DRAWN Jerry Paulson	1/17/2011	PLASTIC-MART 866-310-2556	
CHECKED		TITLE	
QA		50 GALLON LOAF TANK	
MFG			
APPROVED		SIZE B	DWG NO / REV
		SCALE: 1/8	SHEET 1 OF 1