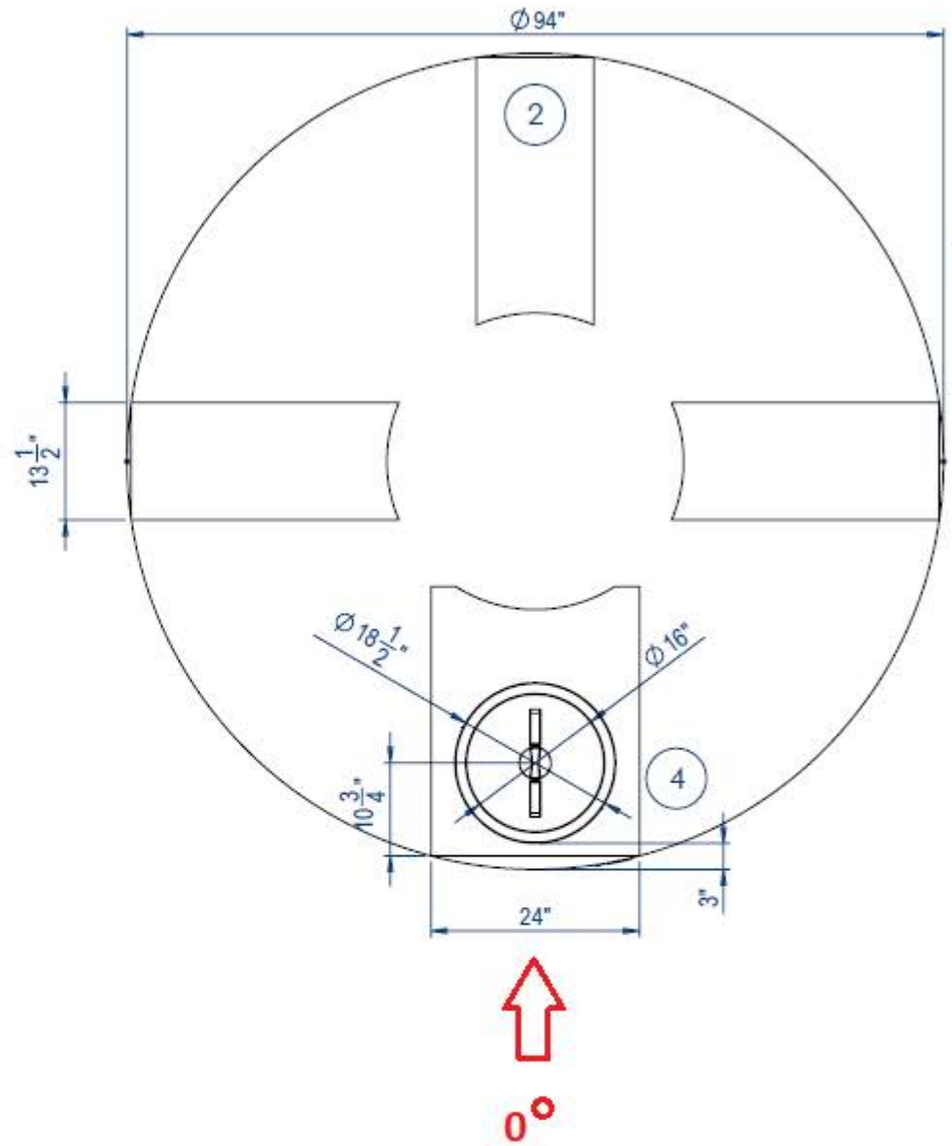

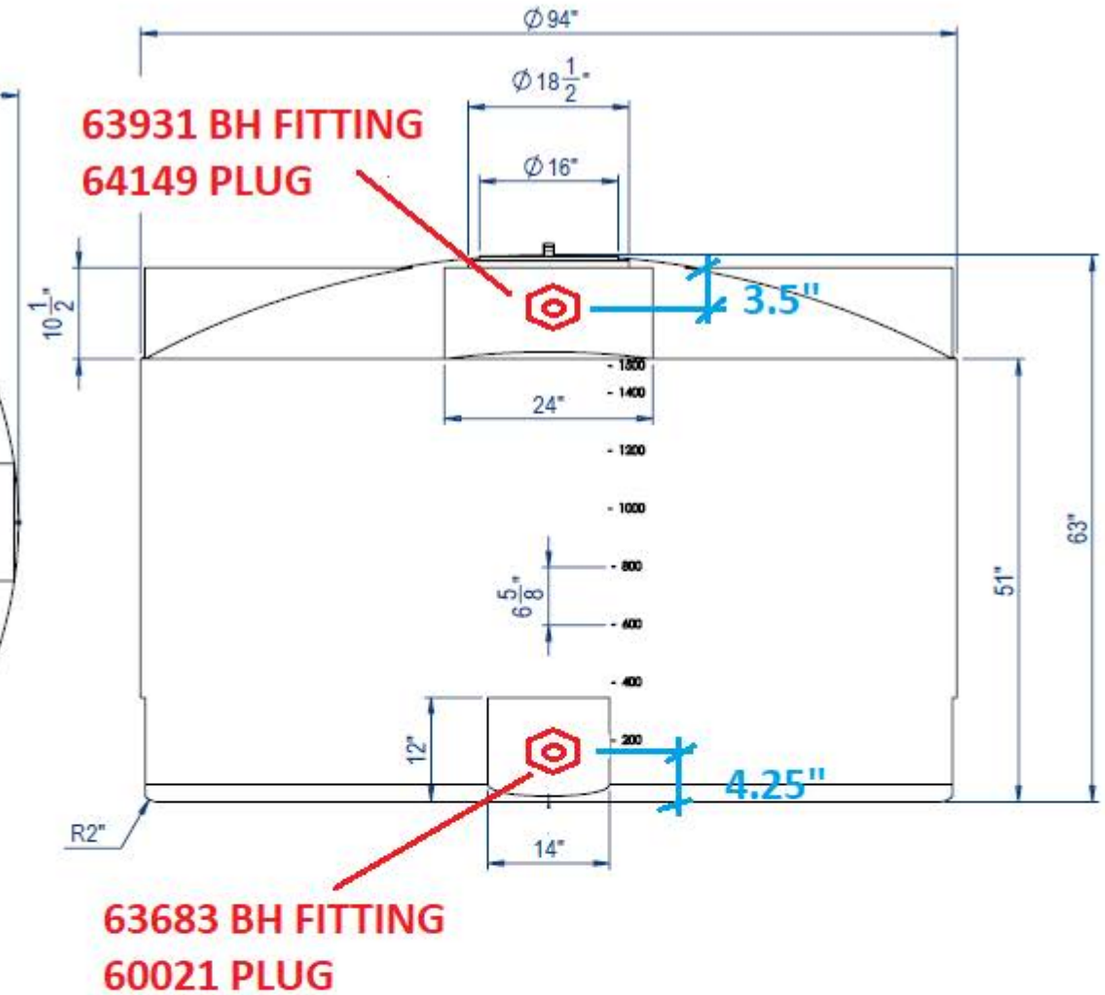

NOTES:

1. Bottom Layout Flat (4) - 12" x 14"
2. Top Layout Flat (3) - 10-1/2" x 13-1/2"
3. Dome Flat (1) - 10-1/2" x 24"
4. Manway - 16"
5. Flush Gallon Markers

PROPRIETARY AND CONFIDENTIAL

THE INFORMATION CONTAINED IN THIS DRAWING IS THE SOLE PROPERTY OF POLY-MART, INC, 16310 BRATTON LANE #210, AUSTIN TX 78728. ANY REPRODUCTION IN PART OR AS A WHOLE WITHOUT THE WRITTEN PERMISSION OF POLY-MART, INC, 16310 BRATTON LANE #210, AUSTIN TX 78728 IS PROHIBITED.

UNLESS OTHERWISE SPECIFIED:		NAME	DATE
DIMENSIONS ARE IN INCHES TOLERANCES: FRACTIONAL ± ANGULAR: MACH ± BEND ± TWO PLACE DECIMAL ± THREE PLACE DECIMAL ±	DRAWN	GM	1/16/2017
	CHECKED		
	ENG APPR.		
	MFG APPR.		
INTERPRET GEOMETRIC TOLERANCING PER:	Q.A.		
MATERIAL HDPE	CAD DESIGN BY - CADWorksPro Chicago, IL		
FINISH	gilm@cadworkspro.com		
DO NOT SCALE DRAWING			

NORWESCO. INC. SAINT BONIFACIUS. MN

1500 Gallon

Poly-Mart Water Only

SIZE	DWG. NO.	REV
B	1500 Water Only	
SCALE: 1:18		SHEET 1 OF 1