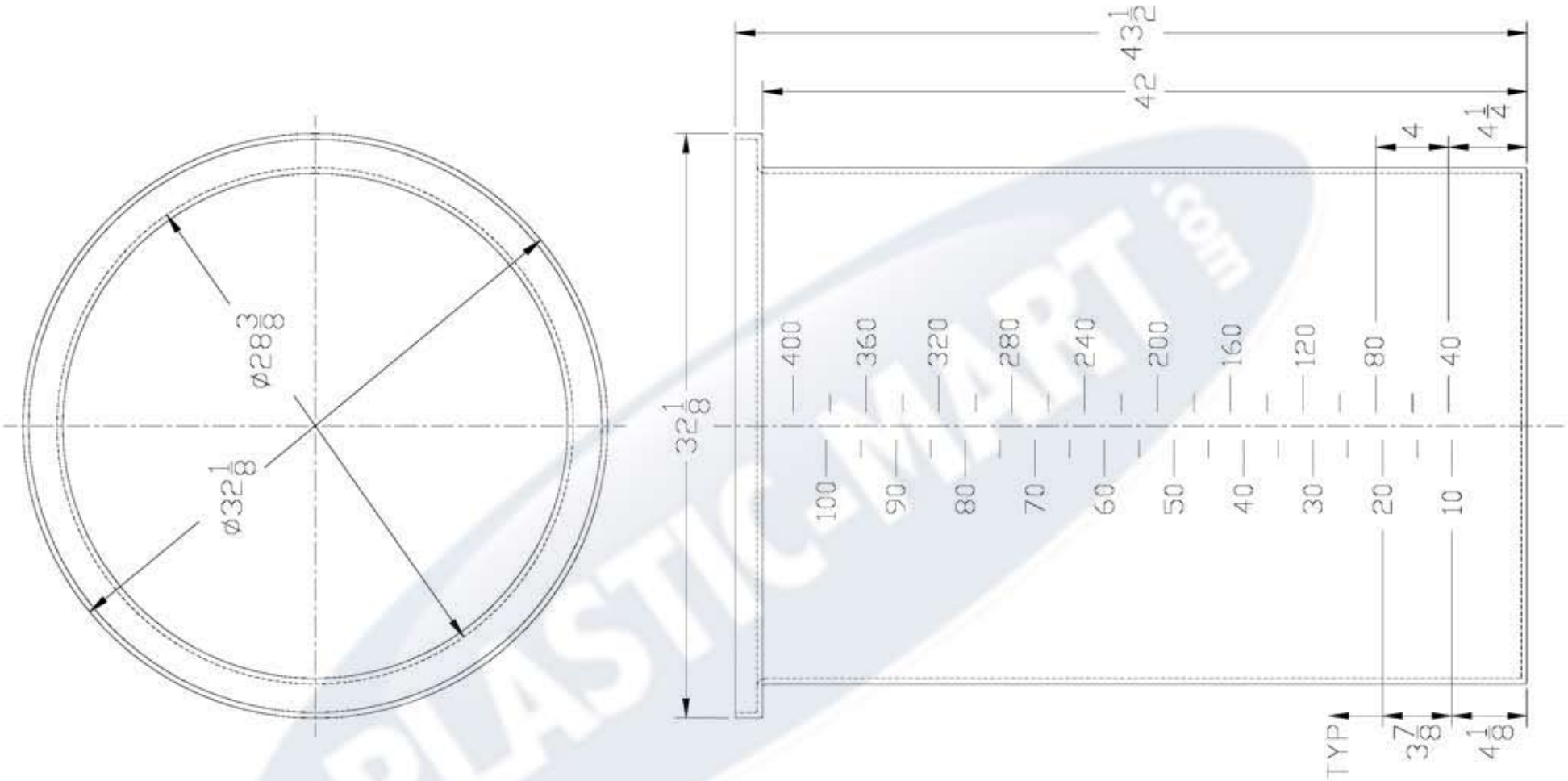

Rev. 0	Date 04/25/01	File Name TC2842-1	
PLASTIC-MART 866-310-2556		Date 04/25/01	Mold Location NY
		Drawn By: IIA	Cust. Rep.
TITLE 100 GAL. OPEN TOP, FLAT BOTTOM CYLINDRICAL TANK			
Part # TC2842AA/AB		Dwg. # C-2842-11	

THIS DRAWING & DESIGN IS
THE PROPERTY OF CHEM-TAINER INDUSTRIES INC.
IT MAY NOT BE USED FOR ANY PURPOSE
OTHER THAN BY THE OWNER. CHEM-TAINER DOES NOT
AUTHORIZE THE REPRODUCTION OR CONVEYANCE
OF ANY INFORMATION CONTAINED HEREIN.

ALL DIMENSIONS SHOWN ARE OUTSIDE PART DIMENSIONS IN INCHES, AND VARY BY THE STANDARD ROTATIONAL MOLDING TOLERANCE OF +2,-3%.