REVISIONS				
ZONE	REV	DESCRIPTION	DATE	APPROVED

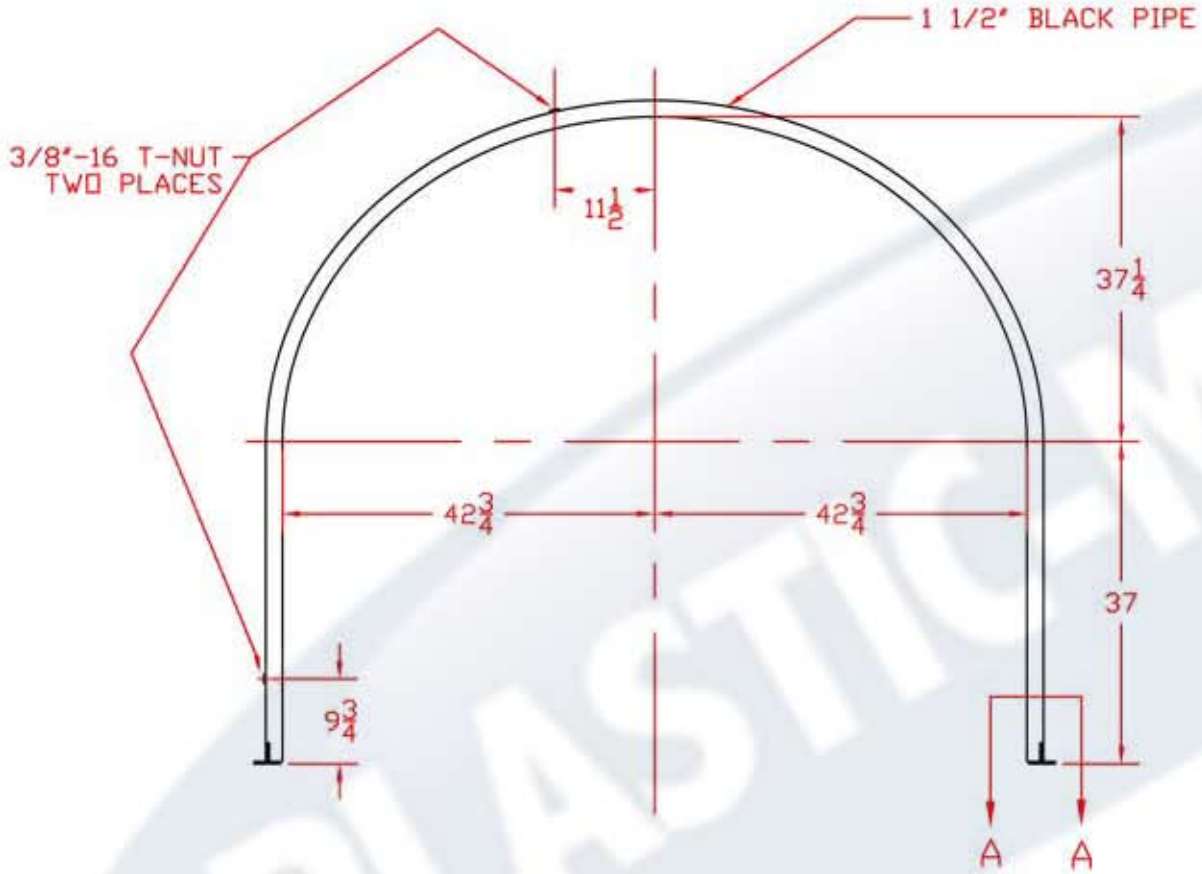

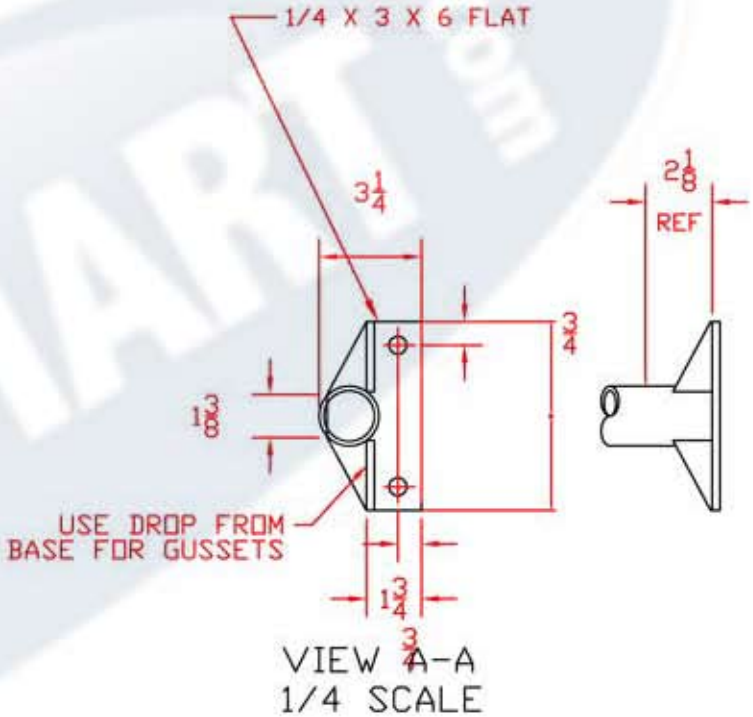

PLASTIC-MART 866-310-2556

BAND, 3135 ELLIPTICAL
TANK, WEST COAST

JTP 13NOV07	SIZE B	FSCM NO.	DWG NO. 63620	REV
	SCALE 1/16		SHEET	