FS1035-78

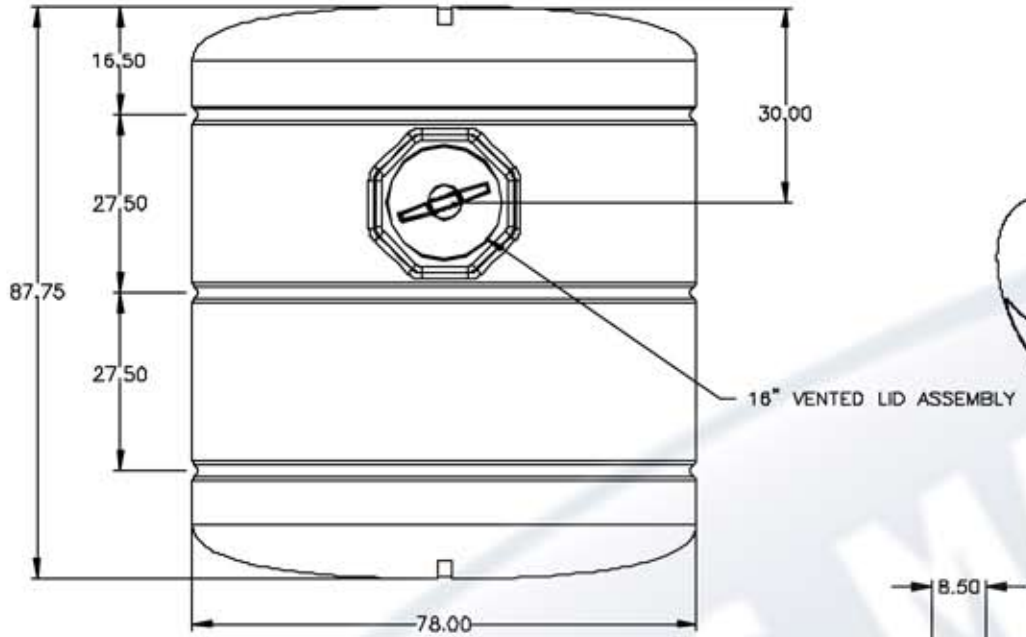

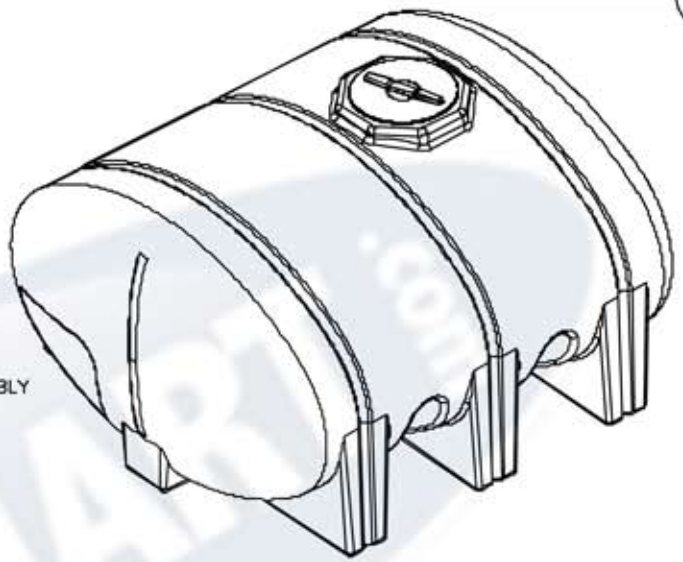

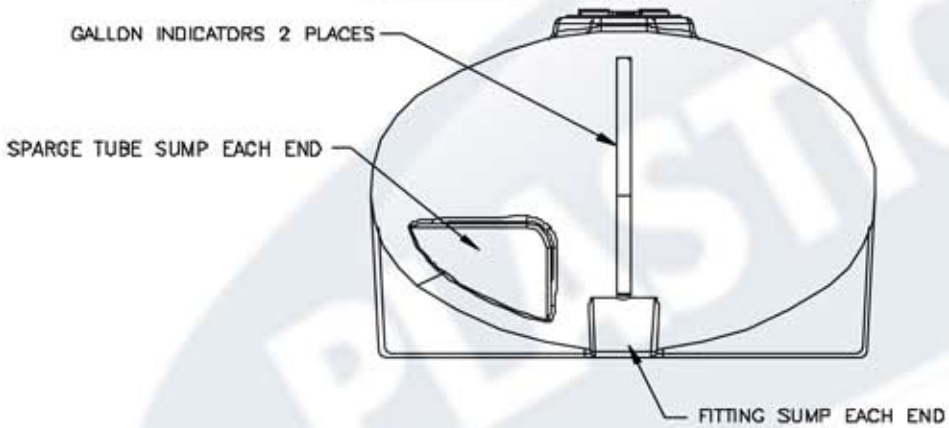

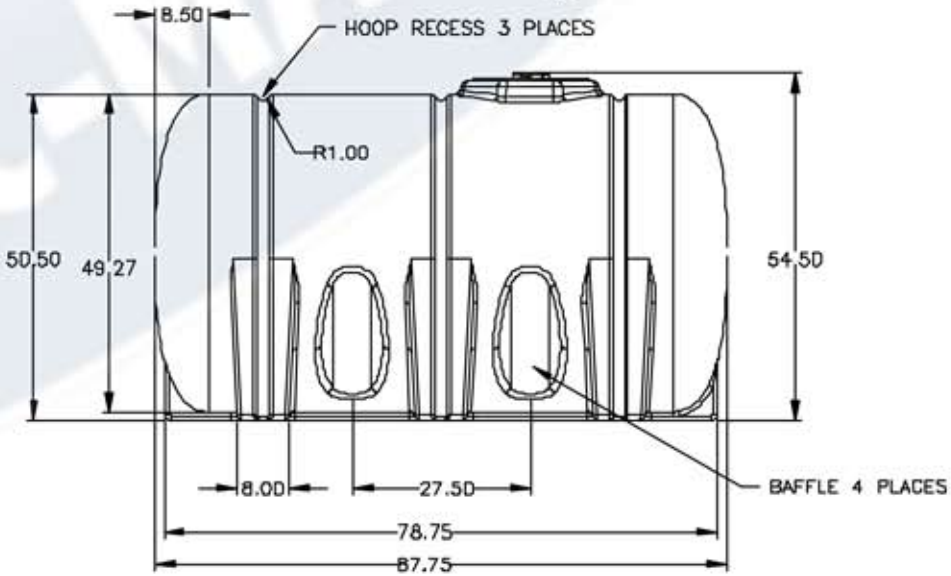

NOTE: 3 HOOPS ARE REQUIRED ON THIS TANK

REV	DESCRIPTION	DATE	APPRD

DRAWN / DATE
REH/9/19/00

APPRD. / DATE
REH/9/19/00

MATERIAL:
280 LB. MDPE

PLASTIC-MART INC.
866-310-2556

CLIENT / DESCRIPTION
1035 GALLON ELLIPTICAL LEG TANK

ALL DIMENSIONS ARE IN DECIMAL INCHES
TOLERANCES UNLESS OTHERWISE SPECIFIED
± 1% @ 68° F

THIRD ANGLE PROJECTION
ANSI 14.5M

NOTES:
1. AVAILABLE IN NATURAL OR YELLOW COLOR.
2. NOM. WALL = .375

SCALE
N.S.

PART NO.
FS1035-78