REVISIONS				
ZONE	REV	DESCRIPTION	DATE	APPROVED

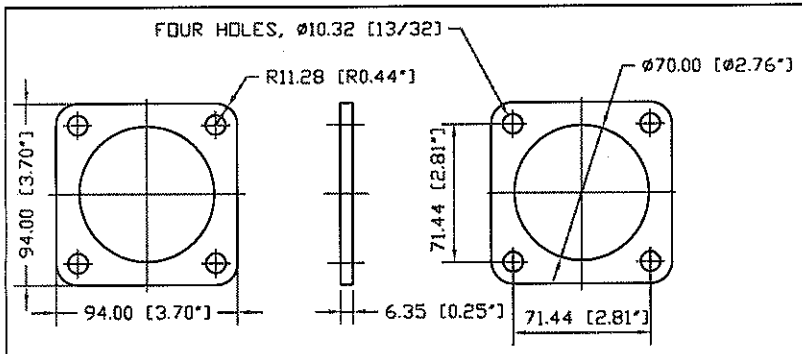

EPDM GASKET P/N 63206
VITON GASKET P/N 6225
1/4" SCALE

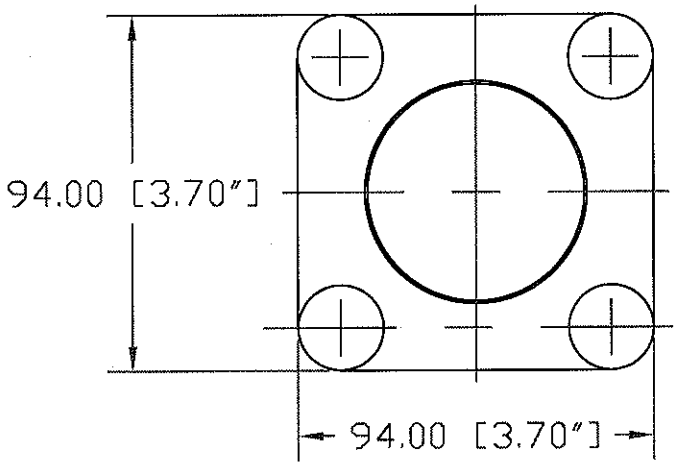

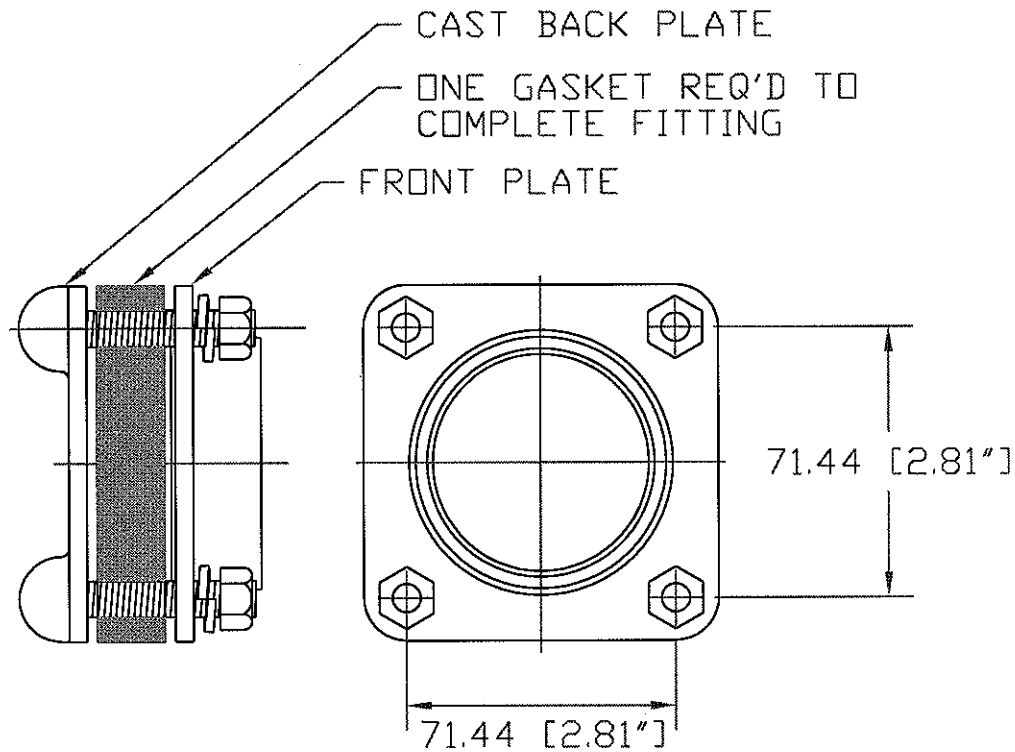

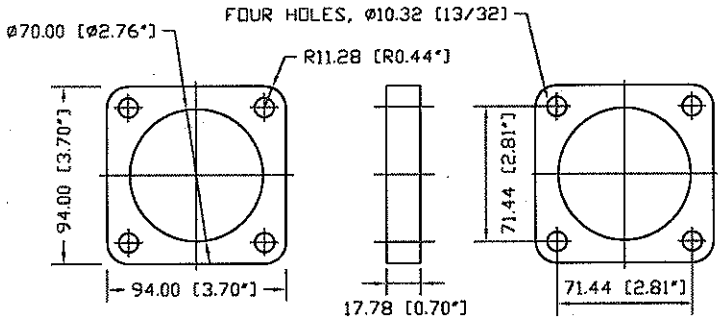

PE FOAM GASKET P/N 62848
1/4" SCALE

NORWESCO
ST. BONIFACIUS, MN

2" SS BOLTED FITTING ASSEMBLY, DOUBLE THD

JTP 05MAR01	SIZE A	FSCM NO.	DWG NO. 63038	REV
	SCALE 1/2		SHEET	