PROPRIETARY DATA

PROPERTY OF ACE ROTO-MOLD MFG., INC. INFORMATION FURNISHED HEREIN IS THE PROPERTY OF ACE ROTO-MOLD MFG., INC.AND SHALL NOT BE USED, DISCLOSED TO OTHERS, OR COPIED WITHOUT THE EXPRESSED WRITTEN CONSENT OF ACE ROTO-MOLD MFG., INC. ALL RIGHTS RESERVED.

10511

A

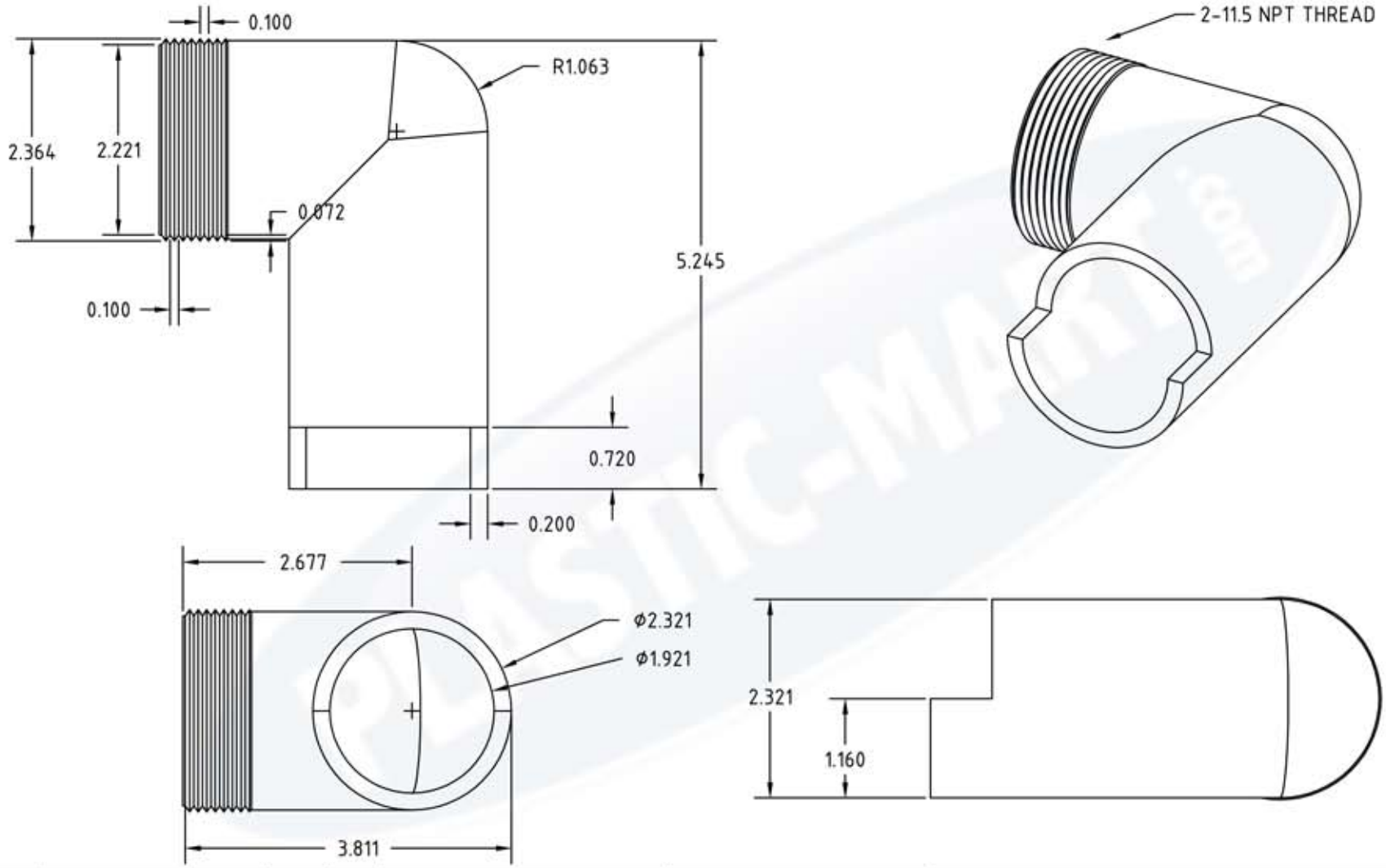

REV	DESCRIPTION	DATE	APPRD	
A	UPDATE LOGO AND TOL. CCN 1296	4/18/07	GWC	

ALL DIMENSIONS ARE IN DECIMAL INCHES
TOLERANCES UNLESS OTHERWISE SPECIFIED
.XXX +/- .016
.XX +/- .032

DRAWN / DATE
NVE 6/23/05

APPRD. / DATE
DHJ 9/21/05

THIRD ANGLE PROJECTION
ANSI 14.5M

MATERIAL
POLYPROPYLENE
REFERENCE MATERIAL DATA SHEET
FOR SPECIFIC PROPERTIES.

NOTES:
1. BLACK COLOR
2. SHOT WEIGHT 4.2 oz.

PLASTIC-MART 866-310-2556

CLIENT / DESCRIPTION
2" SYPHON TUBE

SCALE
N.S.

PART NO.
10511