SP0004-SQ8

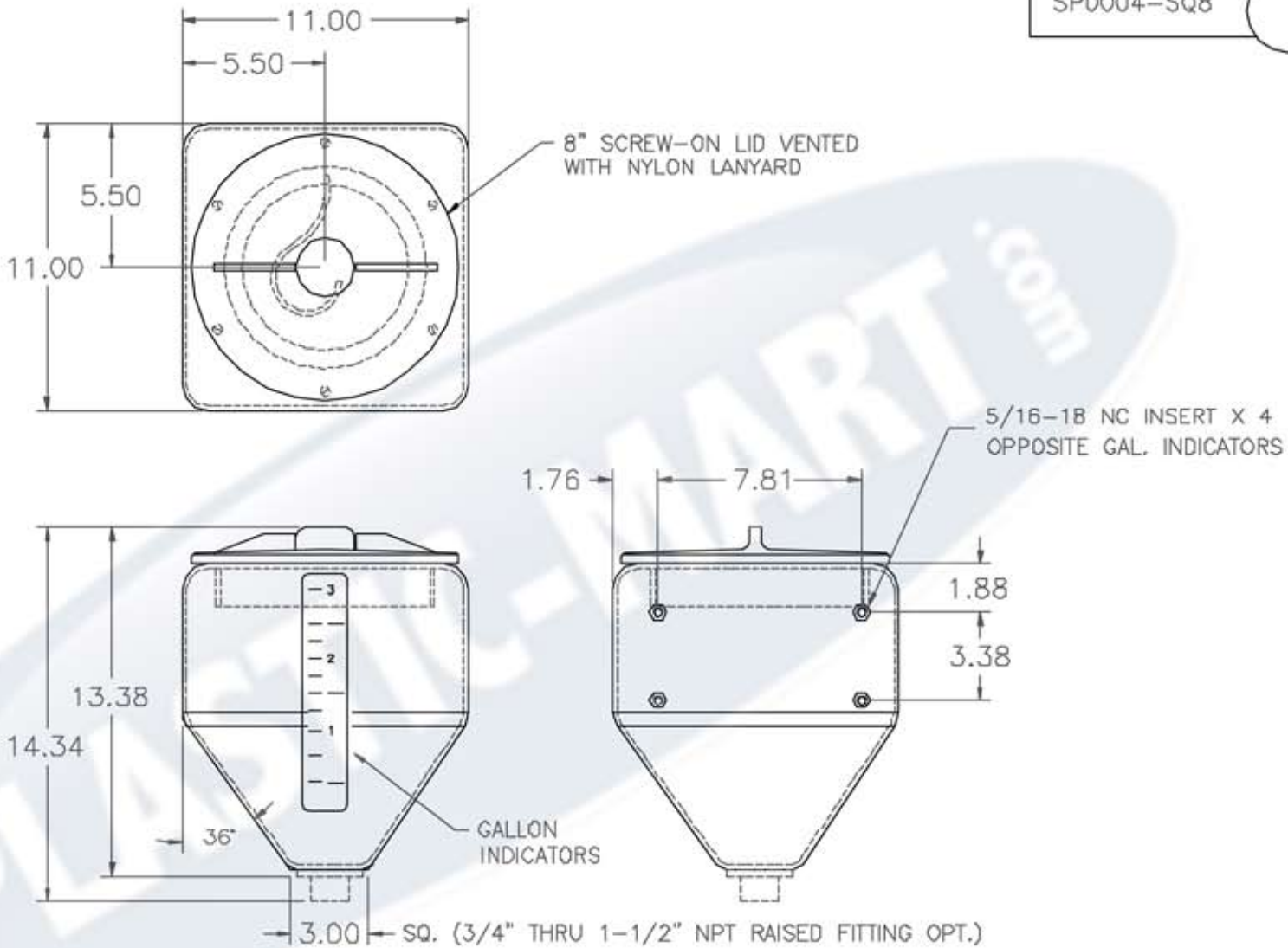

REV	DESCRIPTION	DATE	APPRD

DRAWN / DATE: REH/1/16/97

APPRD. / DATE: REH/1/16/97

MATERIAL / SHOT WEIGHT			
M111	M135	M134	7902
	5.5		

PLASTIC-MART

866-310-2556

CLIENT / DESCRIPTION: ACE 4 GAL. MINI-INDUCTOR TANK

ALL DIMENSIONS ARE IN DECIMAL INCHES
TOLERANCES UNLESS OTHERWISE SPECIFIED
± .5% @ 68° F

THIRD ANGLE PROJECTION
ANSI 14.5M

NOTES:
1. 2.7% SHRINK ALLOWANCE
2. SHIP PART W/CAP INSTALLED

SCALE: N.S.

PART NO.: YELLOW COLOR = SP0004-SQ8-Y
WHITE COLOR = SP0004-SQ8-W