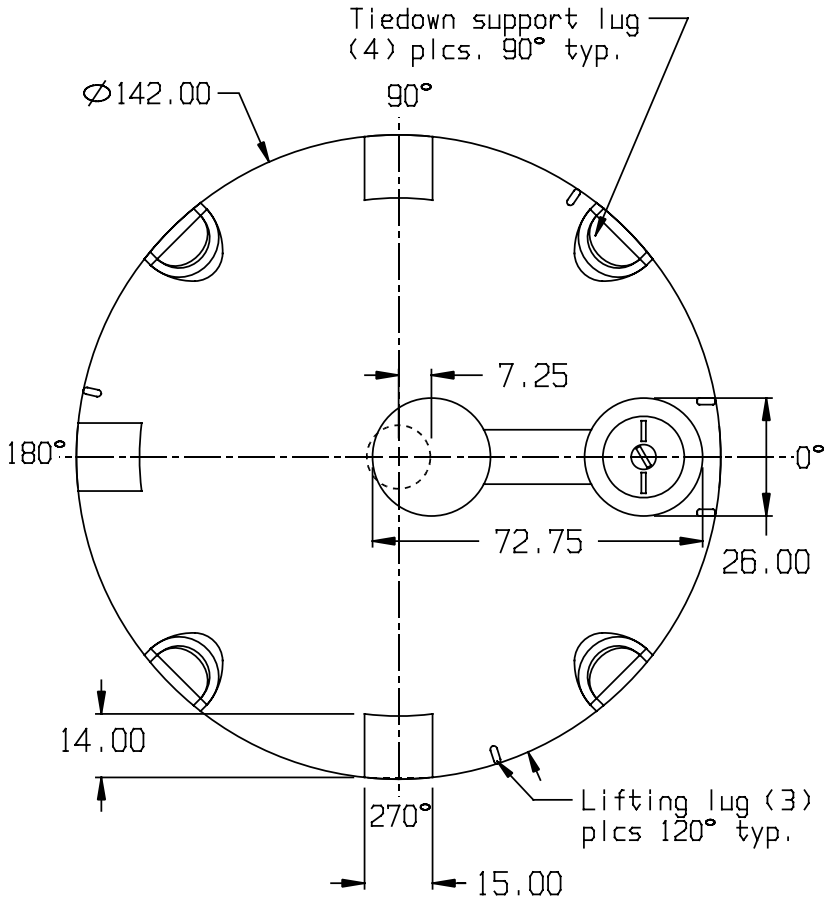

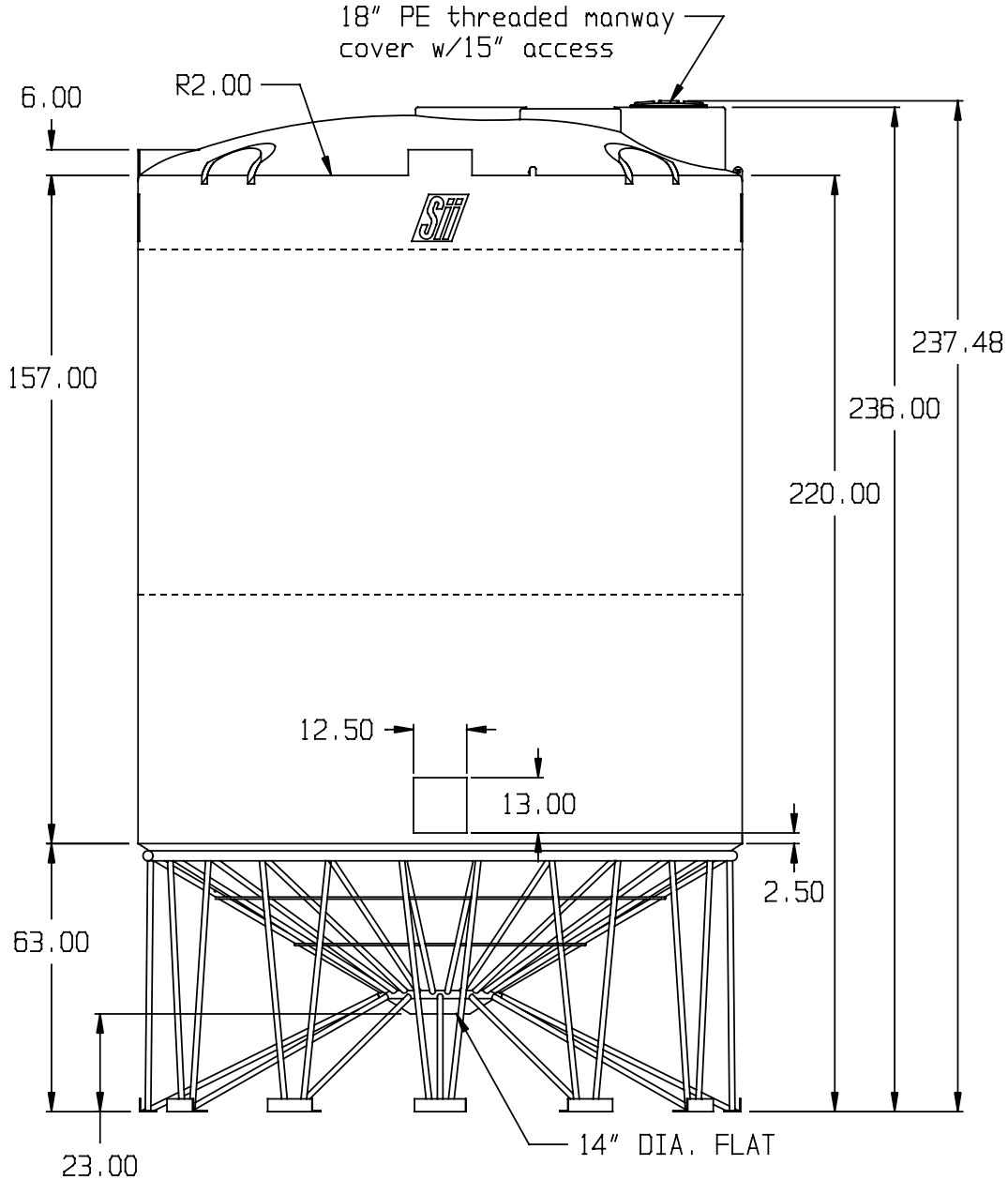

SNYDER INDUSTRIES INC.

* BASE FITTINGS TO BE LEFT INSTALLED AT TIME OF SHIPMENT PER SII PROCEDURE
* Consult Snyder's Guidelines for Use and Installation prior to delivery.
  Available on-line at www.snydernet.com

(all dimensions in inches)

11,500 GALLON 30° CONE BOTTOM TANK W/STAND

PART #S TANK: 5340000N-- (L)

STAND: 79500000

REF#: 00000 06/14/05