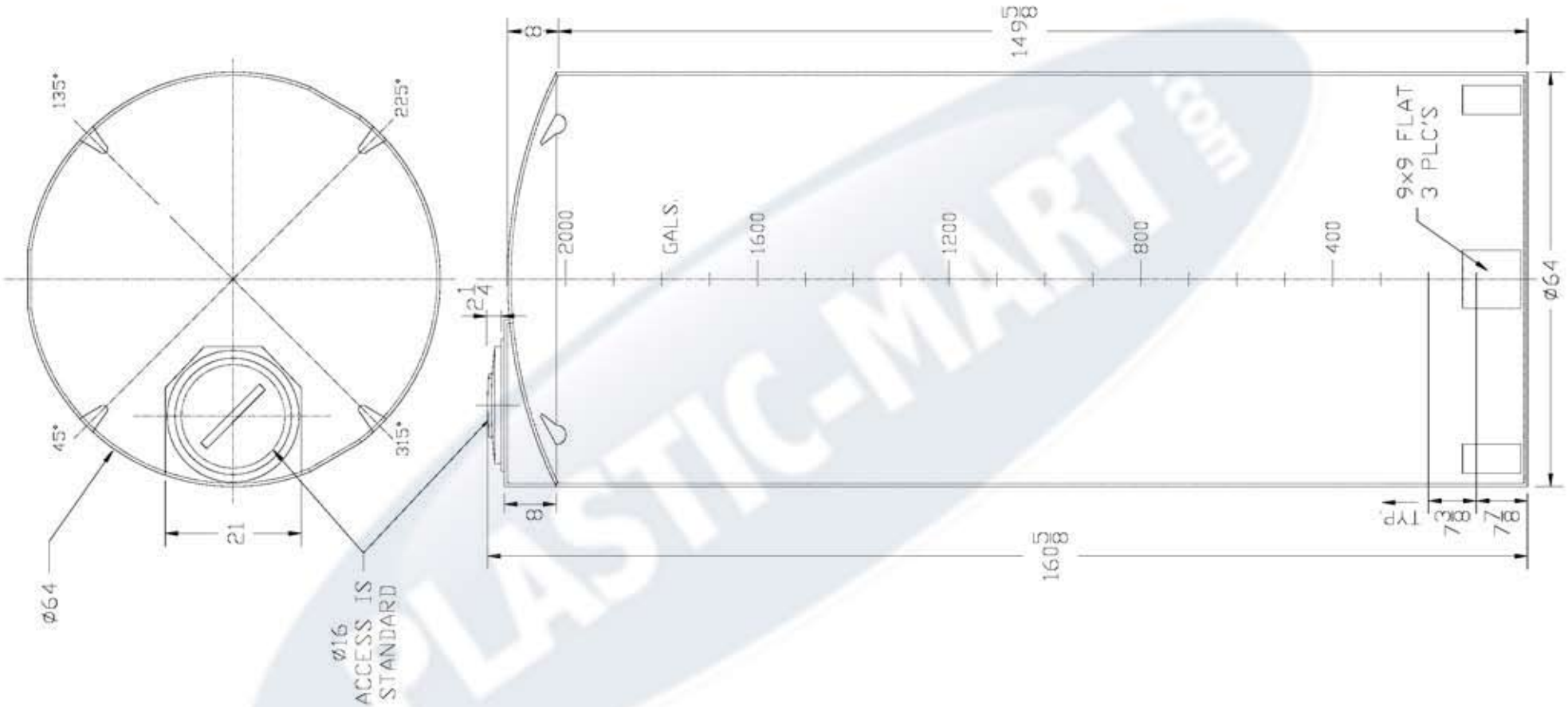

Rev. 1	Date 09/18/00	IA2000-1	
PLASTIC-MART.com 866-310-2556		Date 09/18/00	Mold Location CA
		Drawn By: IIA	Cust. Rep.
TITLE 2000 GAL. STORAGE TANK			
Part # TC2000IA/IC		Dwg. # C-2000-15	

THIS DRAWING & DESIGN IS
THE PROPERTY OF CHEM-TAINER INDUSTRIES INC.
IT MAY NOT BE USED FOR ANY PURPOSE
OTHER THAN BY THE OWNER. CHEM-TAINER DOES NOT
AUTHORIZE THE REPRODUCTION OR CONVEYANCE
OF ANY INFORMATION CONTAINED HEREIN.

ALL DIMENSIONS SHOWN ARE OUTSIDE PART DIMENSIONS IN INCHES,
AND VARY BY THE STANDARD ROTATIONAL MOLDING TOLERANCE OF ±2%.